Upper position

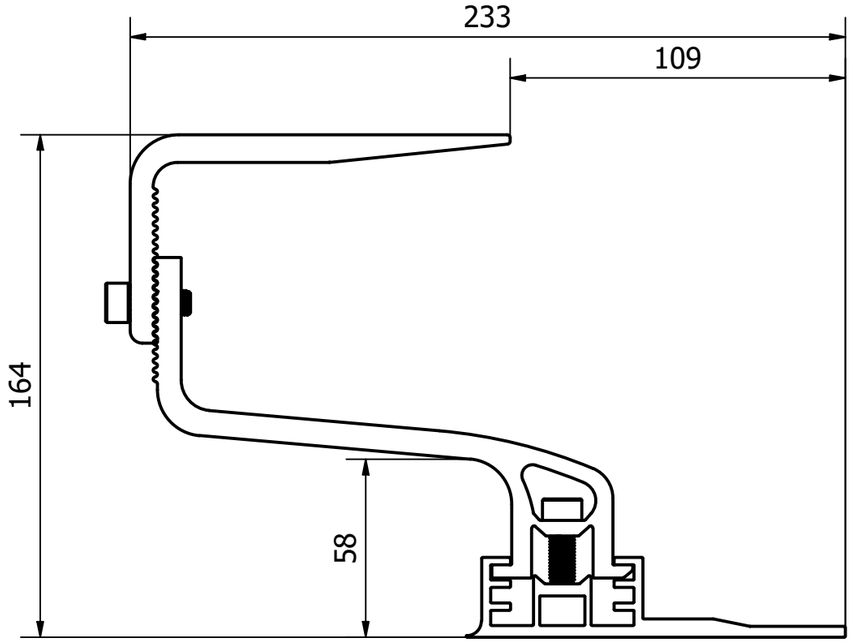

Lower position

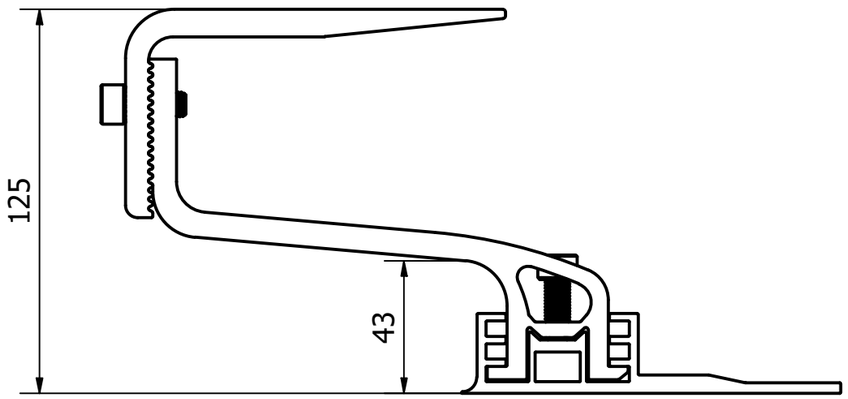

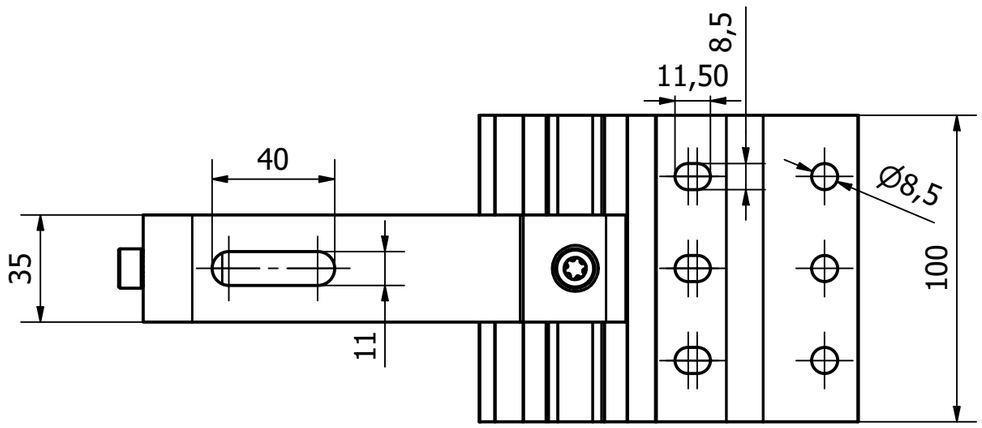

ISOMETRIC VIEW

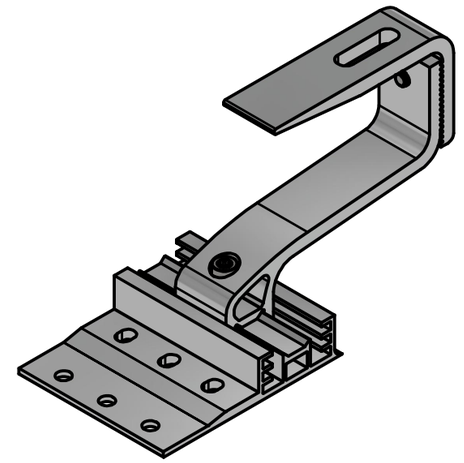

Rev	Drawn Date	Description	Drawn By	Approved By
1				

Designed by: Łukasz Piorko	Material: Aluminum	Weight:	Date: 21.01.2025	ISO (E)

KENO Sp. z o.o. Ul. Daszyńskiego 609, 44-151 Gliwice NIP PL6312671983	K-102-00 Aluminum hook K-102-00-RS-MO-U-001-D_V2.idw	Format: A3 Scale: 1 : 2	Dim without to ISO2768-M ISO13920-B Sheet: 1 / 1

© Copyright 2023 Keno sp. z o.o. All rights reserved. All rights, patent or patentable designs or invention are reserved. The document may not be copied (in whole or in part), used or manufacture or disclosed to others without prior written consent of Keno sp. z o.o.