User Guide

SolarEdge ONE Controller for C&I

Version 1.2

September 2025

MAN-01-01262-1.2

Table Of Contents

About ... 3
Revision history ... 3
Overview ... 3
System architecture ... 3
What's in the package ... 4
ONE Controller for C&I components ... 5
System requirements ... 6
Supported browsers ... 6
Supported protocols ... 6
Before you begin ... 6
Connect to the Local Area Network (LAN) ... 6
Connect to a hotspot ... 7
Connect to the Local UI ... 7
Configure network settings ... 8
Connect to supported devices ... 8
  Pin locations and signals ... 9
Connect energy meters ... 10
Connect Commercial Storage System ... 11
Connect environmental sensors ... 12
Connect inverters ... 13
Connect the I/O ... 14
  Connect digital inputs ... 15
  Connect digital outputs ... 15
Troubleshooting ... 16
A. Appendix A: Modbus maps ... 19
  Modbus maps using holding registers ... 19
  Discovery EMS Modbus maps ... 19
  EMS Modbus maps ... 20
B. Supported devices ... 22
C. Appendix C: ONE Controller for C&I packages and device drivers ... 26
  Add packages ... 26
  Manage devices ... 26
    Add devices ... 26
    View devices ... 27
D. Networking Ports for SolarEdge ONE Controller for C&I ... 28

© SolarEdge Technologies, Ltd 2025. All rights reserved.

About

This guide describes the SolarEdge ONE Controller for C&I and outlines the process of setting up and configuring this solution to synchronize with your site. The Quick Installation Guide (QIG) included with the ONE Controller for C&I provides detailed instructions on how to set it up. For details about compliance information and certifications relevant to the ONE Controller for C&I, see Declaration of Conformity. For technical specifications, see the datasheet.

The image below shows the ONE Controller for C&I.



Revision history

Version	Date	Description
1.2	September 2025	Change in meter wire connection
1.1	July 2025	Updated Appendix B: Supported Devices. Added Appendix D: Networking Ports for SolarEdge ONE for C&I.
1.0	May 2025	Initial release

Overview

The SolarEdge ONE Controller for C&I optimizes energy use across commercial and industrial facilities. It seamlessly integrates the site's energy infrastructure, including PV inverters, SolarEdge Commercial Storage System (CSS-OD), meters, sensors, and other energy equipment, enabling near real-time monitoring and control.

System architecture

The following diagram shows a typical system architecture that includes the on-cloud SolarEdge ONE for C&I optimization platform, the onsite SolarEdge ONE Controller for C&I, and the connection with additional devices, including SolarEdge inverters and commercial storage solutions, as well as energy meters and environmental sensors.

The ONE Controller primarily connects to site devices through TCP/IP. This method ensures reliable and efficient communication, allowing seamless data exchange through Modbus

© SolarEdge Technologies, Ltd 2025. All rights reserved.

TCP. TCP/IP also supports fast data transfer and works well with industrial and solar energy devices, such as PV inverters and CSS.

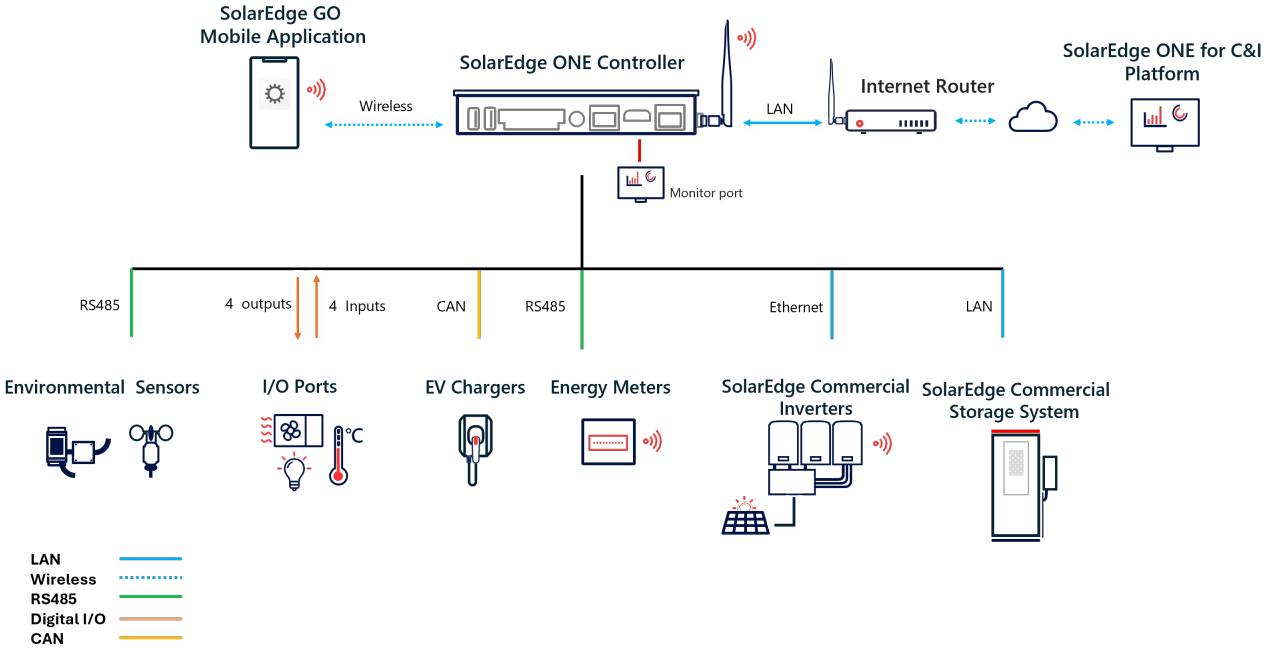

What's in the package

The ONE Controller package includes the following components:

- SolarEdge ONE Controller for C&I
- Quick Start Installation Guide
- 1X dual-row plug
- Wall mount bracket
- DIN rail mount
- Plastic bag containing two of each of the following items: standoffs, nuts, and M3 screws
- Power adapter - 100-240V_{AC}, 50/60Hz
- 2X WLAN antennas

© SolarEdge Technologies, Ltd 2025. All rights reserved.

ONE Controller for C&I components

The following image shows the components of the ONE Controller for C&I:

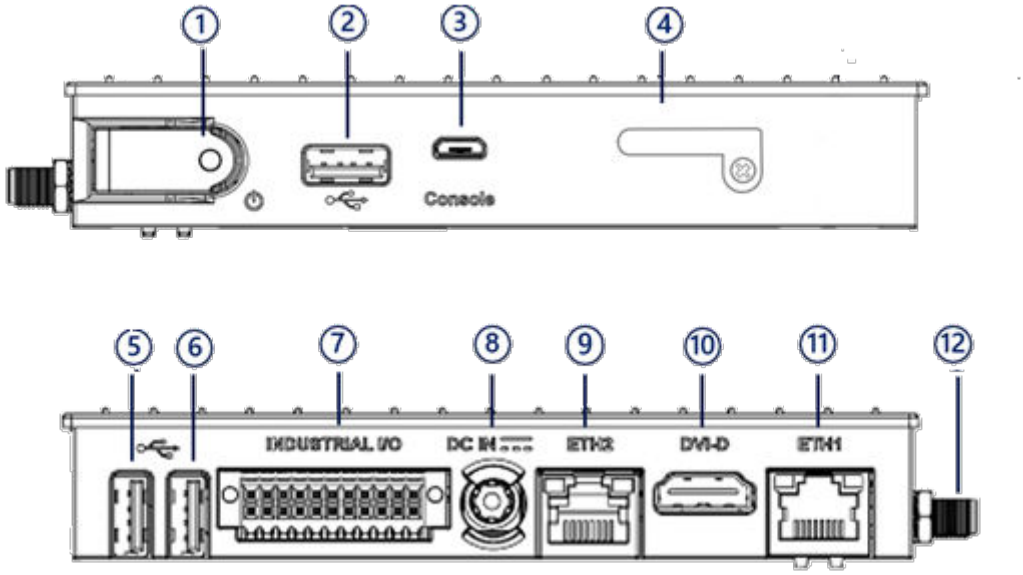

Number	Item	Description
1	⏻	Power ON button with LED
2	⇐	Type A USB 3.0 for Local UI
3	Console	Micro USB for serial debug console
4	PROG SIM	SIM card port
5	⇐	Type A USB 2.0
6	⇐	Type A USB 2.0
7	Industrial I/O	22-pin dual-row I/O and communication ports
8	DC IN	8 to 36V DC power input
9	ETH2	1000 Mbps Ethernet RJ45 connector
10	DVI-D	Screen interface connector
11	ETH1	1000 Mbps Ethernet RJ45 connector
12	WLAN	Wi-Fi antenna port

© SolarEdge Technologies, Ltd 2025. All rights reserved.

System requirements

- An active internet connection with a minimum connection speed of 2Mbps to remotely connect to and allow the ONE Controller for C&I send data to the ONE for C&I platform.

Supported browsers

You can access the Local User Interface by using one of the following internet browsers:

- Chrome
- Safari
- Firefox
- Edge

Supported protocols

- Modbus Transmission Control Protocol (TCP)/ Internet Protocol (IP)
- Modbus Serial RTU (RS485)
- CANbus
- BACnet

Before you begin

- Before connecting to the ONE Controller system, make sure that the ONE Controller for C&I is securely mounted. If installing outdoors, place the controller inside an enclosure rated for the environmental conditions. For details, see the Quick Installation Guide.
- Install the necessary apps or software on mobile devices to interface with the ONE Controller for C&I.

Connect to the Local Area Network (LAN)

Connect an RJ45 cable to ETH2 and your router to ETH1.

NOTE

The industrial I/O interface provides up to three connections. Use an external switch to expand the connection, if needed.

© SolarEdge Technologies, Ltd 2025. All rights reserved.

The ONE Controller for C&I manages communication between all components to ensure seamless operation and optimization of energy usage. The figure below shows the SolarEdge CSS-OD connected to the ONE Controller for C&I through an Ethernet switch, allowing you to monitor and optimize site energy usage. The inverter is also connected to the Ethernet switch, enabling coordination of the conversion of DC energy from PV strings into AC power. The Ethernet switch acts as a central hub for all wired communications using TCP/IP and Modbus TCP over a Local Area Network (LAN) running through CAT 5/6 shielded cables. The internet router provides internet access for remote monitoring and control using the SolarEdge ONE for C&I cloud platform.

The diagram below depicts the ONE Controller for C&I functioning as a LAN communication hub.

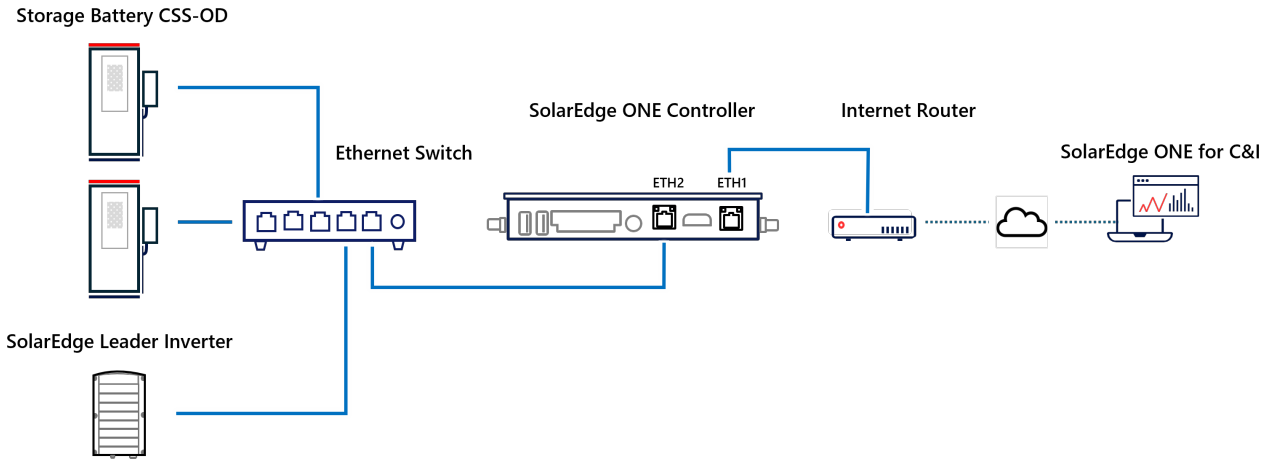

Connect to a hotspot

Within the first 15 minutes of powering ON, or when enabled via the network settings page, the ONE controller for C&I broadcasts the Wi-Fi network named **SolarEdge ONE Controller**. Connect to this network using the device unique password found on the controller's label. Connecting via a hotspot is optional. You can use this hotspot to access the Local UI if connecting an Ethernet cable between the ONE Controller for C&I and a laptop is not feasible.

NOTE

While in the Hotspot mode, the ONE Controller cannot connect to other Wi-Fi networks.

Connect to the Local UI

After connecting to the network, you can access the Local UI via a web browser using the applicable URL.

To connect to the Local UI:

© SolarEdge Technologies, Ltd 2025. All rights reserved.

1. Connect your PC to the ETH1 port of the ONE Controller for C&I.
2. Enter the following URL, http://solaredge-local-controller-{serial}.local
3. Replace {serial} with the ONE Controller serial number found on the unit's label.

Configure network settings

To configure network settings for the ONE Controller for C&I:

1. From **Devices**, go to **Settings** > **Network Settings** > **Connected Interfaces** > **eth1** and click **Edit Configuration**.
2. Under **Connection Method**, select one of the following:
   a. **DHCP** > enter an address for Primary DNS and Secondary DNS according to your network requirements.

      OR

   b. **Static** and confirm the network settings.
3. Click **Save**.
4. Verify that the status is **Connected**.

If the ONE Controller for C&I cannot access the internet because it is not configured or due to a network issue the following warning is displayed:



WARNING

No internet connection detected, Please check the Network Settings. You won't be able to use the ONE Controller for C&I remotely or see data in the platform without an internet connection.

Connect to supported devices

This section explains how to connect the required devices to the ONE Controller for C&I, such as the SolarEdge Energy Meter with Modbus (RS485) Connection, SolarEdge CSS-OD, weather sensors, and irradiance sensors.

The INDUSRIAL I/O port of a ONE controller for C&I is a component that facilitates communication and power management between various devices and systems within a solar energy installation. This port is designed to handle multiple types of communication protocols, signals and power domains, ensuring reliable and efficient operation of the site. The communication lines of the port connect between meters, and environmental sensors, enabling seamless integration and data exchange across the solar site.

© SolarEdge Technologies, Ltd 2025. All rights reserved.

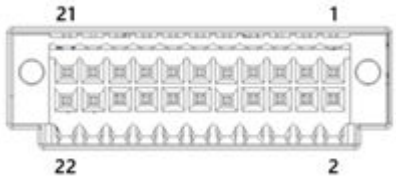

Pin locations and signals

The table below displays the PIN information of the INDUSTRIAL I/O port connector.

PIN	I/O	P domain
1	RS485-1 A(+)	1
2	CAN bus L(ow)	1
3	RS485-1 B(-)	1
4	CAN bus H(igh)	1
5	RS485-1 (G)	1
6	RS485-2 B(-)	2
7	RS485-2 A(+)	2
8	RS485-2 (G)	2
9	IN0	3
10	IN1	3
11	IN2	3
12	-	3
13	IN3	3
14	-	3
15	OUT0	3
16	OUT1	3
17	OUT3	3
18	OUT2	3
19	24V_IN	3
20	24V_IN	3
21	GND_3	3

© SolarEdge Technologies, Ltd 2025. All rights reserved.

PIN	I/O	P domain
22	GND_3	3

Connect energy meters

RS485 connections between the SolarEdge Energy Meter with Modbus Connection and the device ensure reliable data communication and system stability. The energy meter communicates with the ONE controller for C&I using a protocol like Modbus.

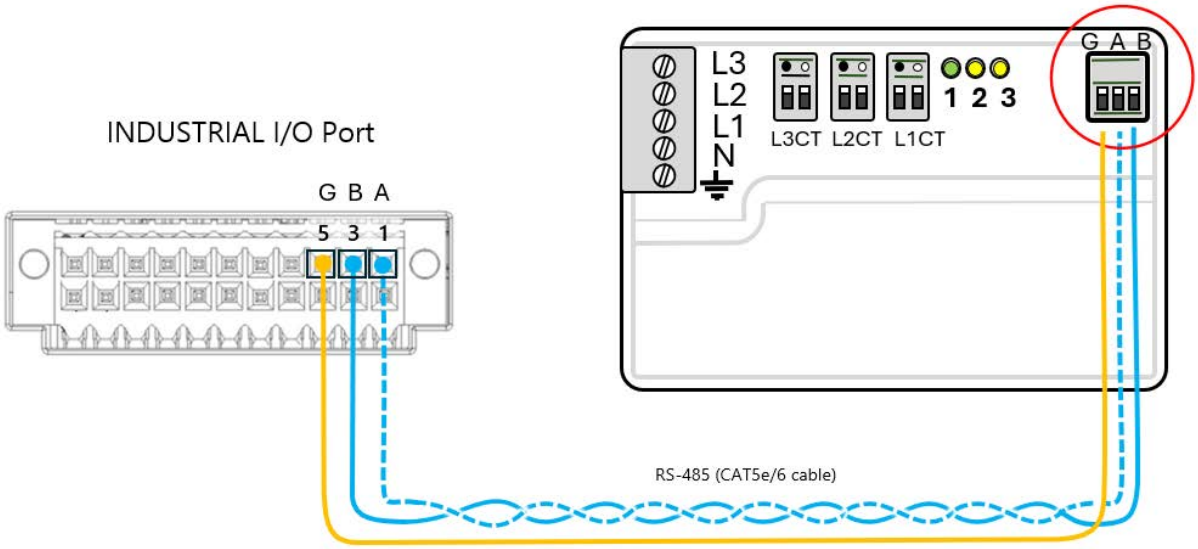

To establish the serial connections for an energy meter:

1. Locate the appropriate terminals in the panel (1, 3, 5).
2. Connect the RS485-1 serial connection from the ONE Controller for C&I to the SolarEdge meter inside the digital I/O. For details, see Pin locations and signals [9].

> **NOTE**
>
> Make sure the connection is made before connecting to terminal blocks 1,3, and 5.

3. Connect additional energy meters to the RS485- terminals in a daisy chain configuration.
4. In the Local UI, set the SolarEdge Energy Meter for 9600 baud, no parity, 1 stop bit, and device ID 1.

© SolarEdge Technologies, Ltd 2025. All rights reserved.

> **NOTE**
>
> Make sure to configure any additional meters to 9600 baud and give each meter a unique ID.

5. Verify connectivity by checking the ONE Controller for C&I interface.

Connect Commercial Storage System

1. Connect the SolarEdge CSS-OD to the same network as the ONE Controller for C&I using ETH2.
2. Enable the DHCP server on the same Ethernet connection as CSS-OD and remember to set a static IP.
3. In the Local UI, go to add device and select **Vulcan Storage Driver**.
4. Follow the onscreen wizard to onboard the device.

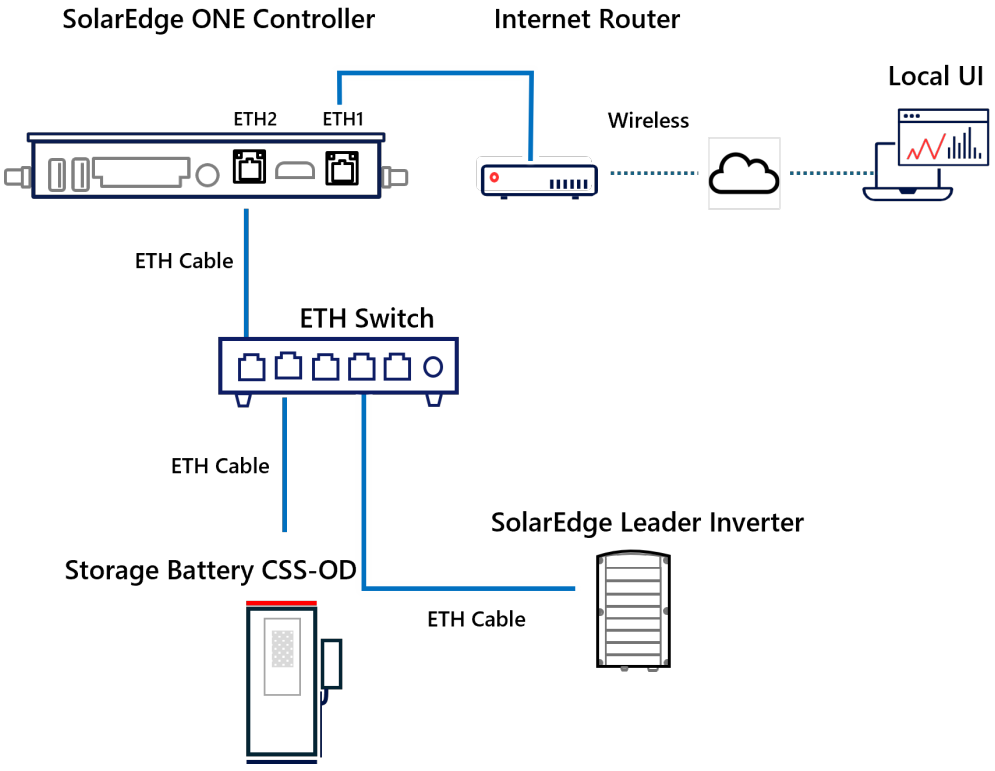

© SolarEdge Technologies, Ltd 2025. All rights reserved.

Connect environmental sensors

Environmental sensors monitor temperature, humidity, and solar irradiance. They send this data to the ONE Controller for C&I, which processes it to optimize system performance. The ONE Controller for C&I makes real-time adjustments to ensure efficient energy production and system stability

Environmental sensors

Type	Description
Temperature sensor	Measures the temperature on the back of the modules
Ambient sensor	Measures the air temperature
Irradiance sensor	Measures the total solar irradiance received on a horizontal surface, offering insights into overall solar energy availability
All-in-One Weather sensor	• Captures various environmental parameters, including wind speed, wind direction, temperature, humidity, pressure, and compass direction. • This data helps in understanding weather conditions that affect solar panel performance
Soiling sensor	• Measures the accumulation of dust, dirt, and other particulates on the surface of solar panels • Soiling can significantly reduce the efficiency of solar panels by blocking sunlight • Helps determine when and where cleaning is needed to maintain optimal performance

This diagram illustrates the wiring connections for a system involving multiple sensors. The sensors connect in a daisy chain and use Modbus RTU over RS485 to transmit data to the ONE Controller for C&I via an optional RS485 part. The components include a 24VDC power supply, various environmental sensors (such as the receiver antenna, an air temperature sensor, and a humidity/temperature sensor), and their respective connections to the ONE Controller for C&I.

© SolarEdge Technologies, Ltd 2025. All rights reserved.

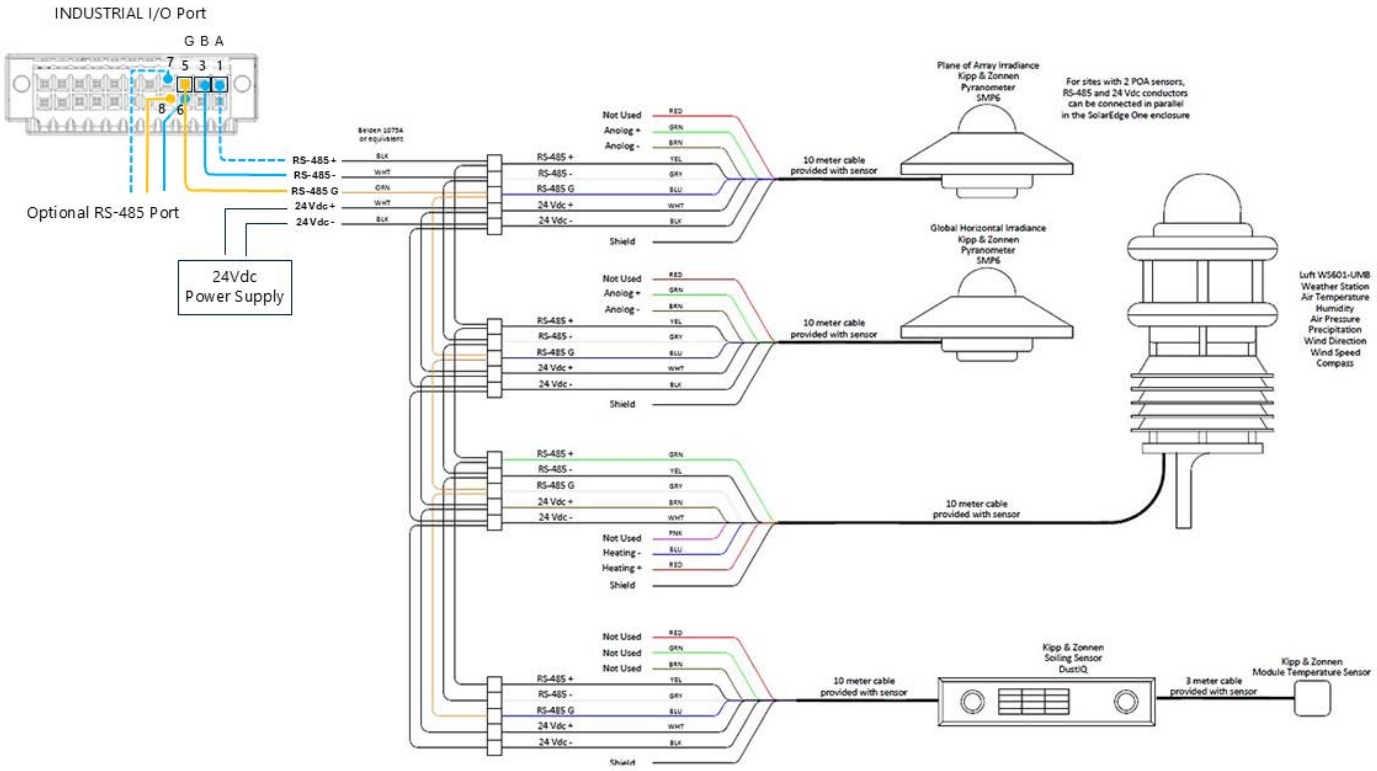

Connect inverters

Connecting SolarEdge leader inverters enables the ONE Controller for C&I to communicate with and access monitoring and control systems. The ONE Controller connects to the SolarEdge leader inverter via TCP/IP, while communication between the leader and follower inverters is established using RS485.

To connect serial connections to an inverter:

1. Use a CAT 5/6 cable to connect the leader inverter to the Ethernet switch. This enables the leader inverter to access ONE for C&I and the ONE Controller for C&I to access the inverter control register via Modbus TCP.
2. Connect the follower inverters to the leader inverter by linking the inverter RS485 ports in a daisy chain configuration.
3. Use Modbus TCP/IP or Modbus RS485 Serial to configure the connection methods.

NOTE

Make sure each inverter has a unique Device ID.

This diagrams shows the ONE Controller and inverter connected via TCP/IP.

© SolarEdge Technologies, Ltd 2025. All rights reserved.

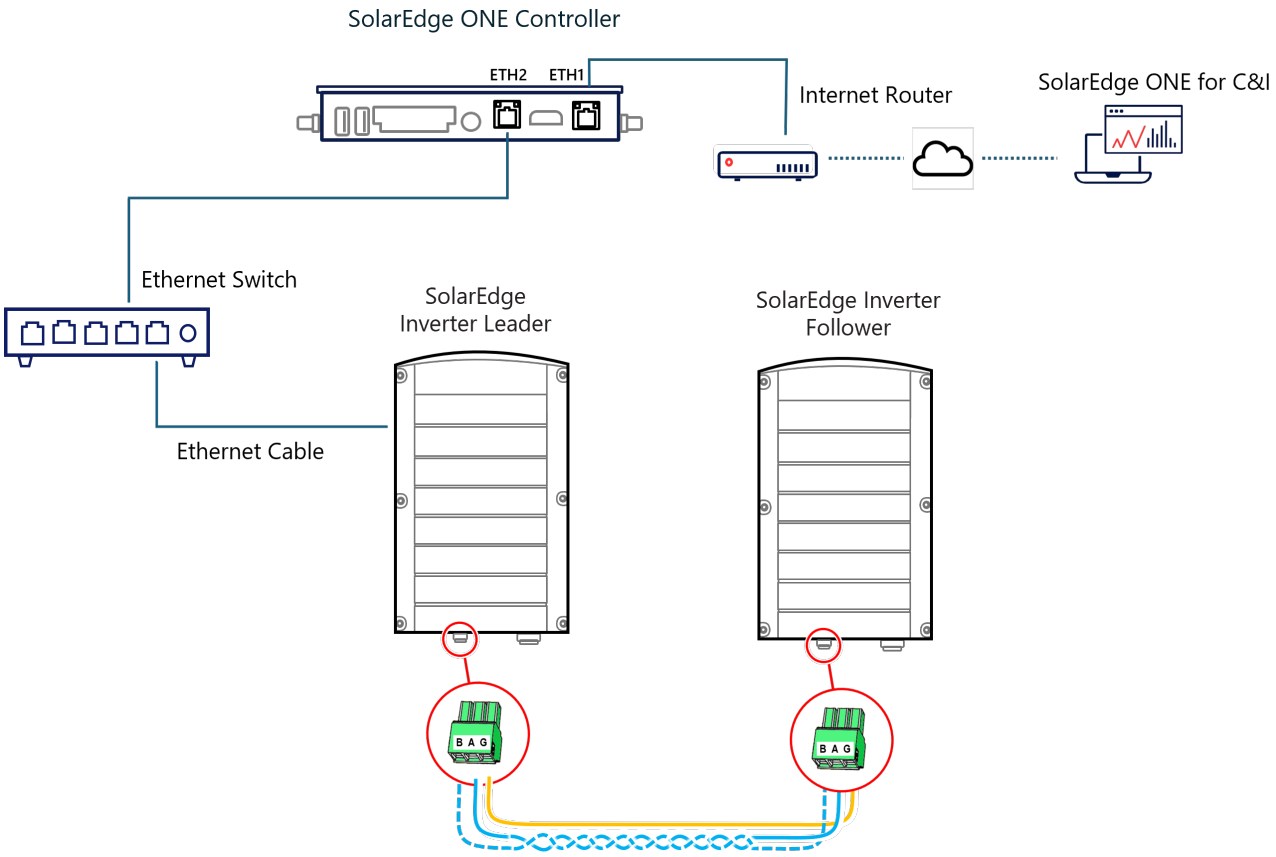

NOTE

- This enables the leader inverter to connect to the internet for accessing SolarEdge ONE for C&I, while the ONE Controller for C&I can access the inverter control register via Modbus TCP.
- We recommend using Belden 3109A 4-core twisted pair cabling for serial connections. Ground the cable at only one side of the cable run to avoid ground loops and interference.

Connect the I/O

The I/O enables the ONE Controller for C&I to send control signals between devices while maintaining separate control and power circuits. The ONE Controller for C&I includes four digital inputs and four digital outputs, both adhering to EN 61131-2 standards. It uses a 24VDC external voltage source to control up to four relays.

Digital inputs provide real-time status information to the controller, which can then use serial connections to communicate this data to other devices or systems. This setup ensures that the ONE Controller for C&I and connected devices communicate effectively, improving system performance. Additionally, serial connections facilitate efficient communication of data, ensuring seamless integration and enhanced system performance.

© SolarEdge Technologies, Ltd 2025. All rights reserved.

Connect digital inputs

Digital inputs provide the ONE Controller for C&I with ON or OFF (binary) signals to help it understand the status of connected devices. The ONE Controller for C&I shares the real-time updates with other connected devices using serial connections.

NOTE

Digital input parameters should match those of the CLT3-4B digital termination.

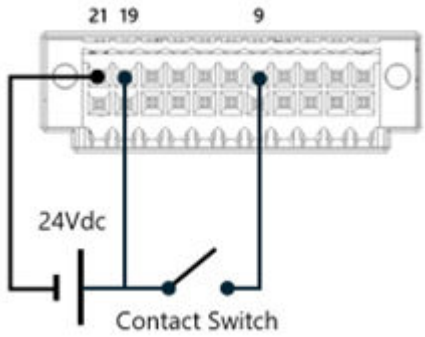

Connect digital outputs

Digital outputs let the ONE Controller for C&I send signals to other devices to control them. The ONE Controller for C&I uses digital output to turn devices ON or OFF.

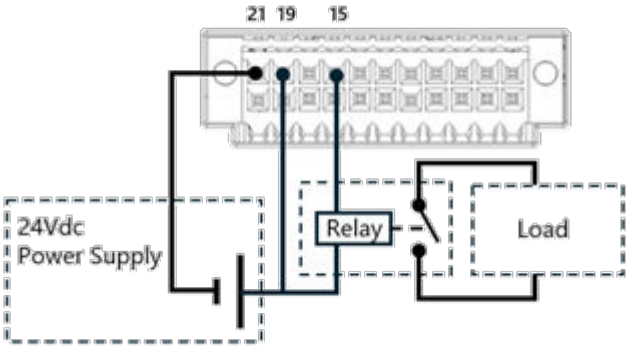

© SolarEdge Technologies, Ltd 2025. All rights reserved.

Troubleshooting

This section provides solutions to common issues that may arise during the installation and operation of the SolarEdge ONE Controller for C&I. See the table below to diagnose and resolve problems effectively.

ONE Controller Troubleshooting

Issue	Indicator	Possible causes	Solutions
No Power to the ONE Controller for C&I	The ONE Controller for C&I does not power on	• Power adapter is not connected properly • Faulty power adapter or power supply	1. Ensure the power adapter is securely connected to the ONE Controller for C&I and the power outlet. 2. Check the power adapter for any visible damage. 3. If damaged, replace it with a compatible adapter. 4. Verify that the power outlet is functioning by testing it with another device.
No Internet Connection	The ONE Controller for C&I cannot connect to the internet	• Incorrect network settings • Network cable is not properly connected; router or network issues	1. Check the network cable connections at both ends (controller and router). 2. Verify the network settings in the ONE Controller's Local UI. 3. Restart the router and the ONE Controller for C&I. 4. Test the network with another device to see if it is blocked by a firewall. 5. Review the required ports.

© SolarEdge Technologies, Ltd 2025. All rights reserved.

Issue	Indicator	Possible causes	Solutions
Unable to Access Local User Interface (UI)	Cannot access the Local UI via a web browser	• Incorrect URL or IP address • Network issues	1. Ensure your PC is connected to the same network as the ONE Controller for C&I. 2. Use the correct URL format: http://solaredge-local-controller-{serial}.local, replacing {serial} with the ONE Controller's serial number. 3. Confirm you are using a supported browser and that neither a VPN or ad blocker.
Devices Not Communicating with the ONE Controller for C&I	Connected devices (e.g., inverters, meters) are not communicating with the ONE Controller for C&I	• Incorrect wiring or connections • Incompatible device settings	1. Verify all wiring and connections according to the installation guide. 2. Ensure that all devices are configured with the correct communication settings (e.g., baud rate, parity, stop bits). 3. Check that each device has a unique ID and is properly addressed in the ONE Controller's settings.

© SolarEdge Technologies, Ltd 2025. All rights reserved.

Issue	Indicator	Possible causes	Solutions
Error Messages in the Local UI	Error messages appear in the Local UI	• Configuration issues • Connected device errors	1. Refer to the error message details and follow any suggested actions. 2. Check for firmware or software updates and apply them if available. 3. Restart the ONE Controller for C&I and recheck the configuration settings.
Inconsistent Data or Readings	Data from connected devices is inconsistent or incorrect	• Faulty sensors or devices • Interference or noise in communication lines	1. Verify the accuracy of the sensors or devices by cross-checking with other measurement tools. 2. Ensure that communication lines are properly shielded and grounded to prevent interference. 3. Replace any faulty sensors or devices.

If the issue persists, contact SolarEdge support with details, including error messages and the details of the ONE Controller for C&I found on the About page of the Local UI.

© SolarEdge Technologies, Ltd 2025. All rights reserved.

Appendix A: Modbus maps

All Modbus maps below use holding registers. All register values are in big endian formats, and for values span over more than one register we use high word first. If both manual and strategy overrides are set, the manual override takes precedence.

Modbus maps using holding registers

All Modbus maps below use holding registers. All register values are in **Big Endian**, and for values span over more than one register we use **high word first**.

Discovery EMS Modbus maps

This is a read-only map that can be used to discover the EMS Modbus map. The map is read-only and includes high-level information about the EMS and its capabilities. This should be used first to detect whether the site has PV and storage and the nominal power of each.

Register	Size	Name	R/W	Units	Type	Range	Description
0x0064/100	16	ControllerSerial	R	N/A	ASCII		Serial number of the controller
0x0074/116	8	EmsSoftwareVersion	R	N/A	ASCII		EMS Software version
0x0078/124	4	MaxAcPvPower	R	Watt	Uint64	=0	Total Rated power of the site PV array, zero if no PV is available
0x0080/128	4	MaxAcStoragePower	R	Watt	Uint64	=0	Total Rated power of the site Storage array, zero if no PV is available
0x0084/132	4	MaxStorageChargePower	R	Watt	Uint64	=0	Nominal charge power of the site storage array, zero if no storage is available

© SolarEdge Technologies, Ltd 2025. All rights reserved.

Register	Size	Name	R/W	Units	Type	Range	Description
0x008C /140	4	MaxProductionPower	R	Watt	Uint 64	=0	Total Max Production power of the site, including all assets available
0x0090/ 144	4	NameplateStorageEnergy	R	Watt	Uint 64	=0	Nameplate Storage Energy, zero if no storage is available

EMS Modbus maps

This is the Modbus map that can be used to read the EMS live metrics. The map includes the power imported/exported to the grid, and the available assets power measurements.

Register	Size	Name	R/W	Units	Type	Range	Description
0x0190/ 300	4	GridPower	R	Watt	Int64	positive or negative int	Grid meterPower measurement
0x00CC /204	4	AcPvGeneration	R	Watt	uint64	positive int	AC PV generation power
0x00D0 /208	4	AcStoragePower	R	Watt	int64	positive or negative int	Power from/to storage system. positive: dispatch, negative: charge
0x00D4 /212	2	SOC	R	Percentage	Float32	0...100	State of charge of the storage system

© SolarEdge Technologies, Ltd 2025. All rights reserved.

Register	Size	Name	R/W	Units	Type	Range	Description
0x00D6 /214	1	Status	R	N/A	Uint16	1...3	Operational status 1: ON 2: Off 3: Manual override 4: Strategy override

© SolarEdge Technologies, Ltd 2025. All rights reserved.

Appendix B. Supported devices

The following devices are supported by packages using the Modbus protocol.[1]

PV Inverters, Commercial Storage Systems, Meters

Product	Vendor	Model / Identifier	Supported Protocols
PV Inverters			
SolarEdge three-phase commercial inverters	SolarEdge	SE20K-SE40K	Modbus RTU over RS485 Modbus TCP/IP via Ethernet
SolarEdge three-phase inverters with Synergy technology (SE50K-SE100K)	SolarEdge	SE50K-SE120K	Modbus RTU over RS485 Modbus TCP/IP via Ethernet
Commercial Storage System			
CSS-OD	SolarEdge	CSS-OU-20	IEC 104
Energy meters			
Energy meter	SolarEdge	SE-RWND-3D-480-MB	Modbus RTU over RS485
Energy meter	SolarEdge	SE-WYND-3Y400-MB	Modbus RTU over RS485
Energy meter	SolarEdge	SE-MTR-3Y-400V-A	Modbus RTU over RS485
Energy meter	SolarEdge	SE-WND-3Y400-MB-K2	Modbus RTU over RS485
Energy meter	SolarEdge	SE-RGMTR-3D-208V-A	Modbus RTU over RS485
Energy meter	SolarEdge	WND-WR-MB	Modbus RTU over RS485
Energy meter	Janitza	UMG Series (96-S2, 104, 512, 604, 604 Pro, 605 Pro)	Modbus TCP and RTU over RS485

[1]1Contact your local SolarEdge team to request additional devices to be supported.

© SolarEdge Technologies, Ltd 2025. All rights reserved.

Meteorological sensors

Product Name	Vendor	Model / Identifier	Measured Parameters	Supported Protocols
All-in-One Weather Sensor	Thies	Thies Clima Sensor US	• Wind speed • Wind direction • Precipitation • Air temperature • Relative humidity • Air pressure • Brightness • Twilight • Radiation • GPS & Compass	Modbus RTU over RS485
Irradiance Sensor	IMT Technology	Si- RS485TC-2T-MB	• Solar irradiance • Cell temperature • Ambient temperature	Modbus RTU over RS485
Irradiance Sensor	IMT Technology	Si- RS485TC-2T-v-MB	• Solar irradiance • Cell temperature • Temperature (PV module or ambient temperature) • Wind speed	Modbus RTU over RS485
Irradiance Sensor	IMT Technology	Si-RS485TC-T-MB	• Solar irradiance • Cell temperature	Modbus RTU over RS485

© SolarEdge Technologies, Ltd 2025. All rights reserved.

Product Name	Vendor	Model / Identifier	Measured Parameters	Supported Protocols
Irradiance Sensor	IMT Technology	Si-RS485TC-3T-MB	• Solar irradiance • Cell temperature • Temperature 1 (PV module or ambient temperature) • Temperature 2 (PV module or ambient temperature)	Modbus RTU over RS485
Digital Module Temperature Sensors	IMT Technology	Tm-RS485-MB	• PV model surface temperature	Modbus RTU over RS485
All-in-One Weather Sensor	Kipp and Zonen	WS50PV	• Air temperature • Relative humidity • Barometric pressure • Wind speed • Wind direction	Modbus RTU over RS485
Soiling Monitoring System	Kipp and Zonen	DustIQ	• Soiling on PV panels	Modbus RTU over RS485
Smart Rooftop Monitoring System	Kipp and Zonen	RT1	• Solar irradiance • Back panel temperature	Modbus RTU over RS485
Smart Pyranometers	Kipp and Zonen	SMP Series	• Global solar irradiance	Modbus RTU over RS485

© SolarEdge Technologies, Ltd 2025. All rights reserved.

Product Name	Vendor	Model / Identifier	Measured Parameters	Supported Protocols
Smart Weather Sensor	Lufft	WS500-UMB	• Air temperature • Relative humidity • Air pressure • Wind speed • Wind direction • Precipitation (intensity, type, and amount) • Solar radiation	Modbus RTU over RS485

© SolarEdge Technologies, Ltd 2025. All rights reserved.

Appendix C: ONE Controller for C&I packages and device drivers

The ONE Controller for C&I connects to third-party devices using drivers. Drivers are managed using the package system. Packages are managed in the Local UI.

Add packages

You must add Packages to enable the device drivers, allowing the ONE Controller for C&I to interface with other devices.

1. From **Packages**, go to **Add Packages**.
2. Select **File Upload** or **URL Installation**.
3. Upload the file or add the URL and click Upload or Install.

Manage devices

Devices represent the physical assets on site, such as energy meters, inverters, commercial storage units, and environmental sensors.

Add devices

The Device page displays a list of currently supported devices that you can add to the ONE Controller for C&I.

1. From **Devices**, go to **Add a Device** > **Select a Driver** and click **Continue**.

> **NOTE**
>
> Select the relevant Device Driver for the device you are adding.

2. Select the connection protocol > enter the **Device ID** and click **Continue**.
3. Select the **Model** > **Continue** and click **Complete**.

The newly added device now appears in the Devices page of the Local UI. For a list of supported devices, see Appendix B: Supported devices.

> **NOTE**
>
> Depending on the device you are adding, the parameters fields are dynamically generated.

© SolarEdge Technologies, Ltd 2025. All rights reserved.

View devices

To view the devices metrics and status in real time:

- From **Devices**, go to the required **Device** card > **Overview** and click **Show Charts**. You can access a visual analysis of the metric data in real time for the relevant device.

To view the commands supported by connected devices:

- From **Devices,** go to the required **Device** card > **Commands** > select a Command from the drop-down menu and click **Execute**. The Command's output appears in the Response window.

To view the Events:

- From **Devices**, go to the required **Device** card > **Events**. You can view the Event Name, Description, and number of times it occurred.

© SolarEdge Technologies, Ltd 2025. All rights reserved.

Appendix D. Networking Ports for SolarEdge ONE Controller for C&I

NOTE

The SolarEdge ONE Controller for C&I exposes specific network ports. To ensure secure operation and compliance with cybersecurity requirements, install the SolarEdge ONE Controller only on networks with authorized and trusted devices

Port	Network	Required
TCP/80	Web server to provide web UI and API	Yes
UDP/5353	mDNS	Yes
UDP/67	DHCP	No
TCP/2404	IEC 104	No
TCP/10502	Modbus	No
TCP/10503	Modbus	No

© SolarEdge Technologies, Ltd 2025. All rights reserved.