KENO

# ASSEMBLY INSTRUCTIONS FOR STAND L-06

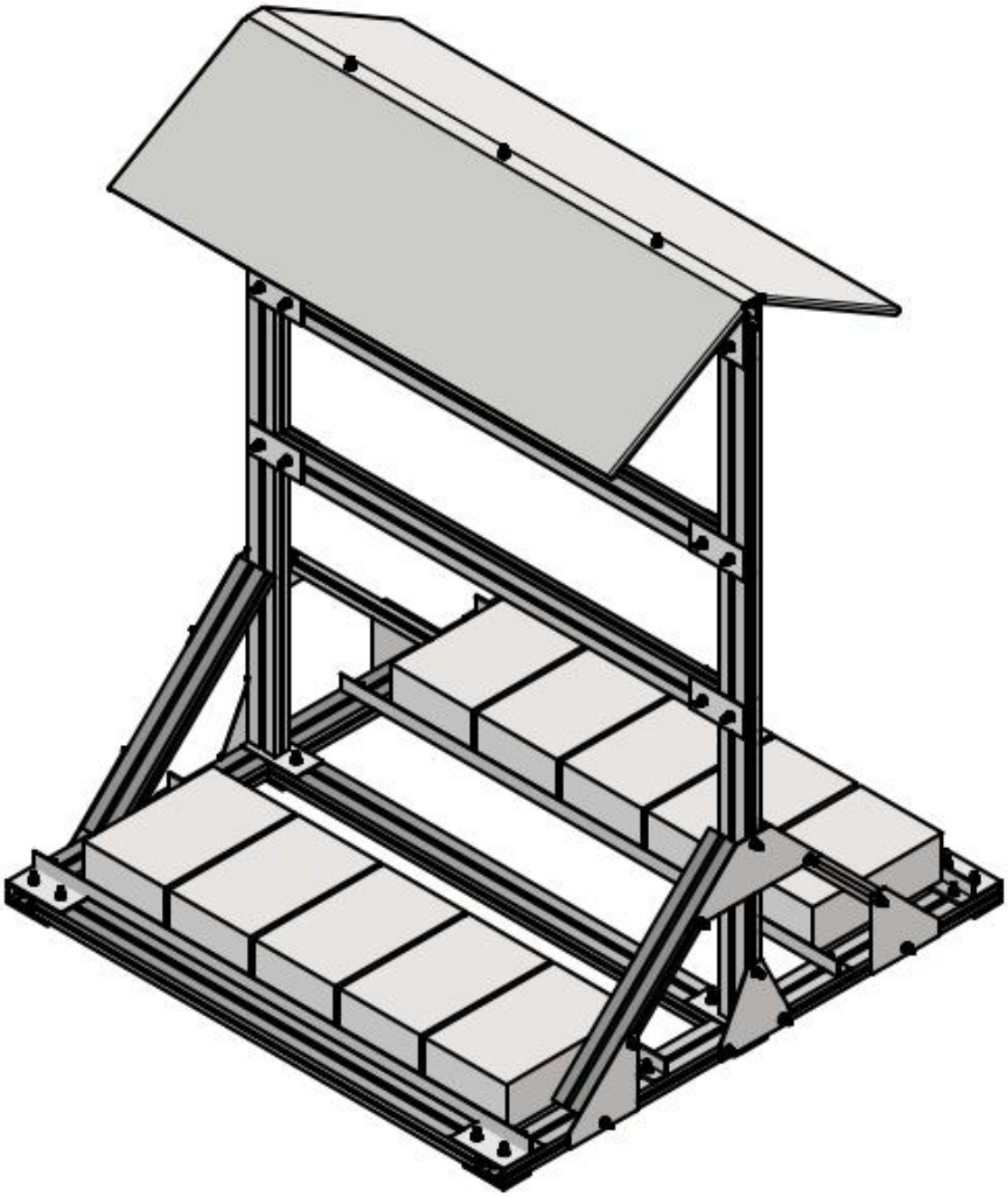

During production, every effort was made to ensure that you receive a top-quality product that is also easy to install. These instructions are a set of rules for the correct installation of the structure components, but do not constitute a design or a substitute for it. The installer carrying out the installation must be suitably trained and qualified for the job. The installer is fully responsible for correct installation and should select the appropriate type of structure.

1. List of kit components

| ITEM | DESCRIPTION | QUANTITY | LENGTH | VIEW |
|---|---|---|---|---|
| 1.1 | Base (Profile K-25) | 2 | 1460 mm |  |
| 1.2 | Crossbar (Profile K-25) | 5 | 1300 mm | |
| 1.3 | Pillar (Profile K-25) | 2 | 1760 mm | |
| 1.4 | Upper beam (Profile K-25) | 1 | 1460 mm | |
| 1.5 | Strut (Profile K-25) | 4 | 651 mm | |
| 1.6 | Angle bracket under the ballast (Profile K-26) | 4 | 1460 mm |  |
| 2 | Connector L-06-06 | 18 | - | 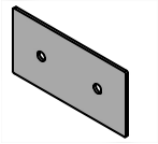 |
| 3 | Sheet metal L-06-02 | 4 | - | 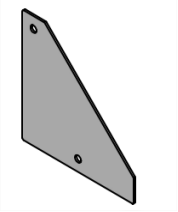 |
| 4 | Metal sheet L-06-03 | 2 | - | 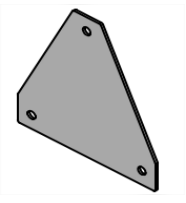 |

| | | | | |
|---|---|---|---|---|
| 5 | Metal sheet L-06-04 | 2 | - | 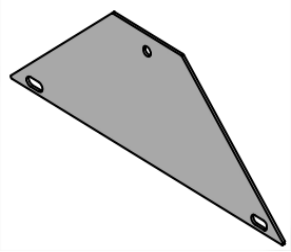 |
| 6 | Bent metal sheet L-06-05 | 1 | - | 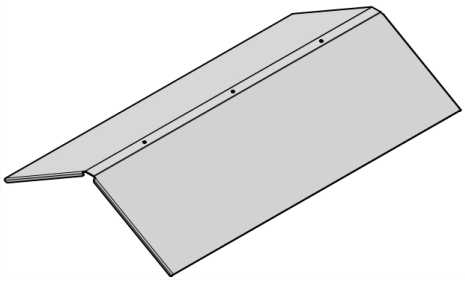 |
| 7 | T-bolt K-19-30 | 75 | - |  |
| 8 | Nut K-21 | 75 | - |  |
| 9 | Rubber plate K-98-10 | 6 | - | 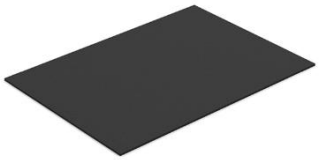 |

Tab 1. Kit components

2. Screwing of the base with profiles **1.1;1.2** and fasteners **2**;, as shown in pictures 1 and 2. Tighten the nuts to a minimum torque of 40Nm.

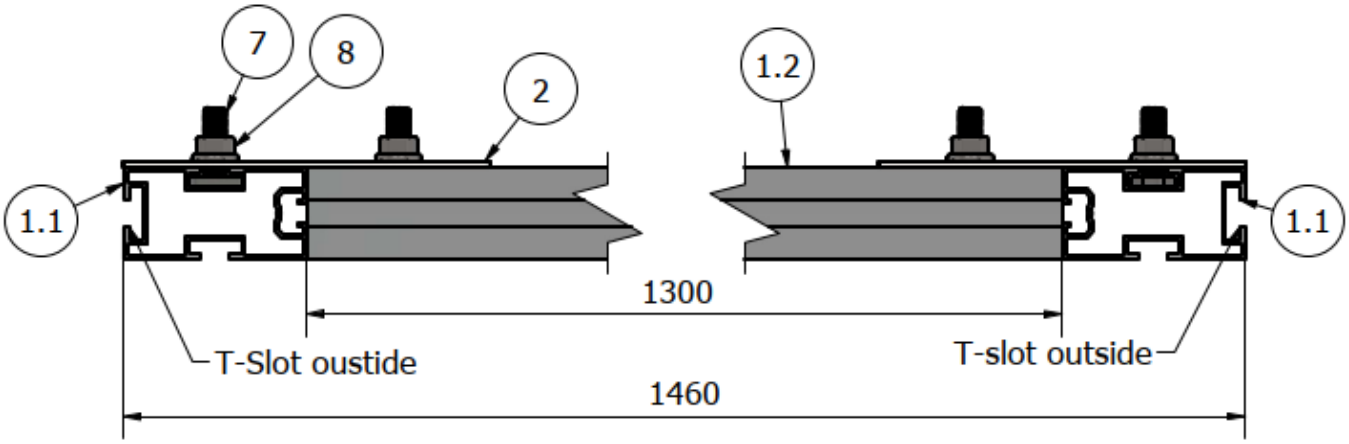


FIG. 1 Setting up the base profiles



KENO
WWW.B2B.KENO-ENERGY.COM
WWW.KENO-ENERGY.COM

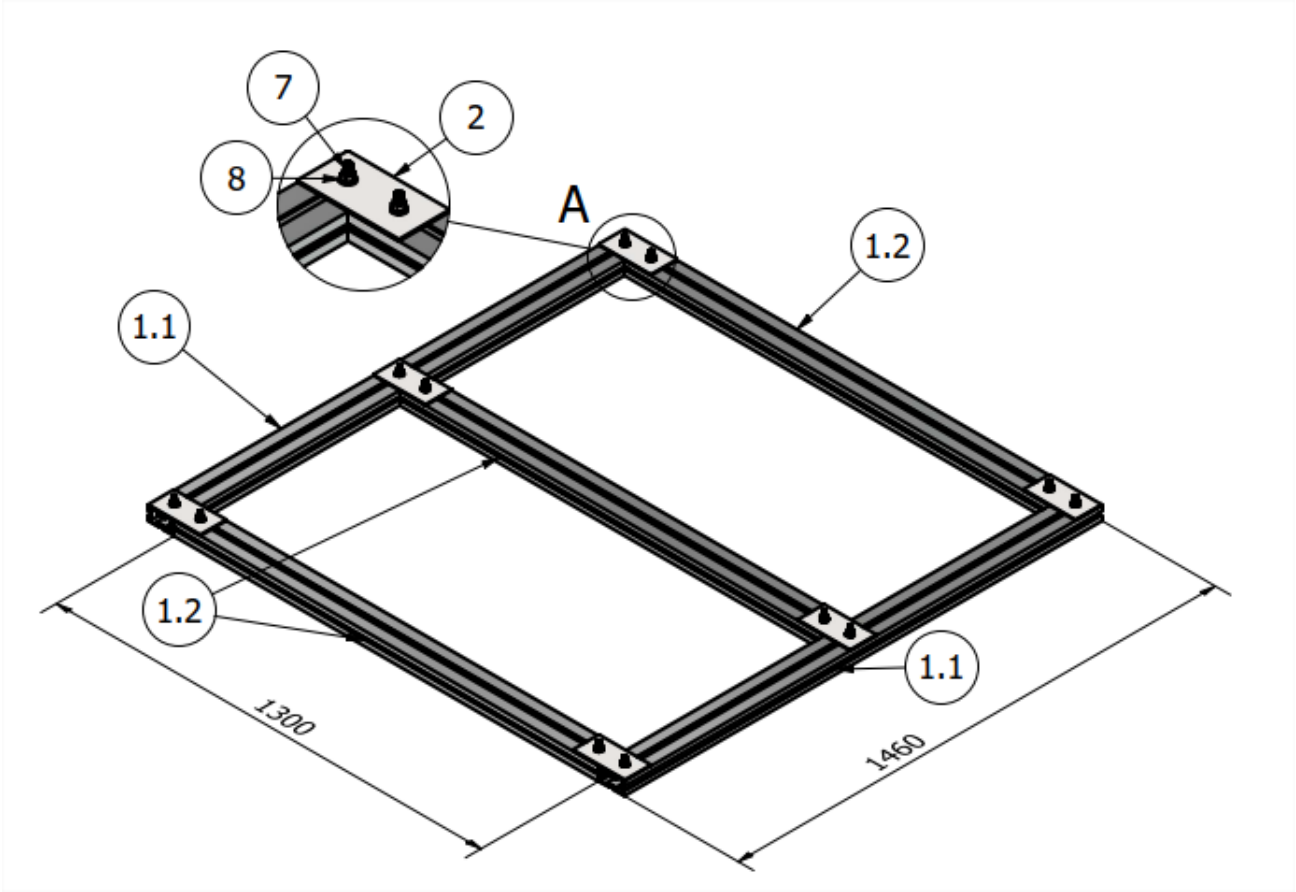


FIG. 2 Bolting the base

3. Turn the base over and glue the rubber plates **9** as shown in Figure 3.

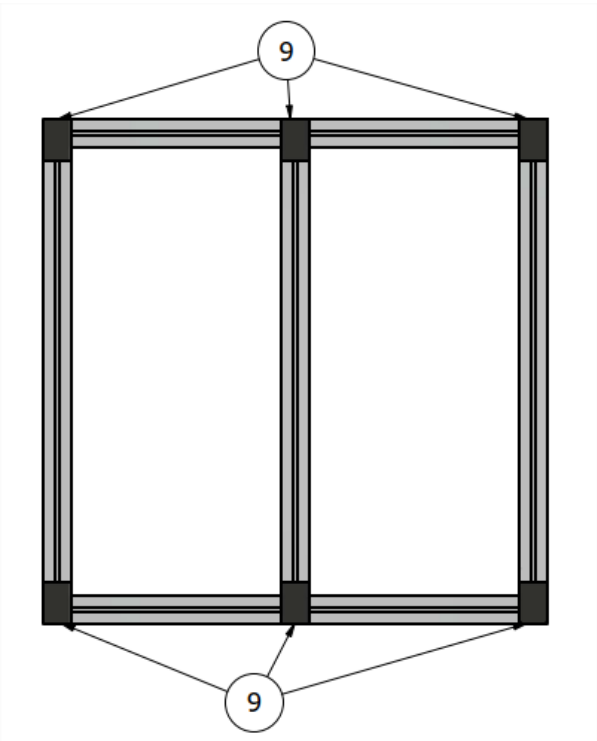


FIG. 3 Bonding the rubber plates



KENO
WWW.B2B.KENO-ENERGY.COM
WWW.KENO-ENERGY.COM

4. Using sheet metal 4, bolt the vertical posts **1.3** to the base as shown in Fig. 4.

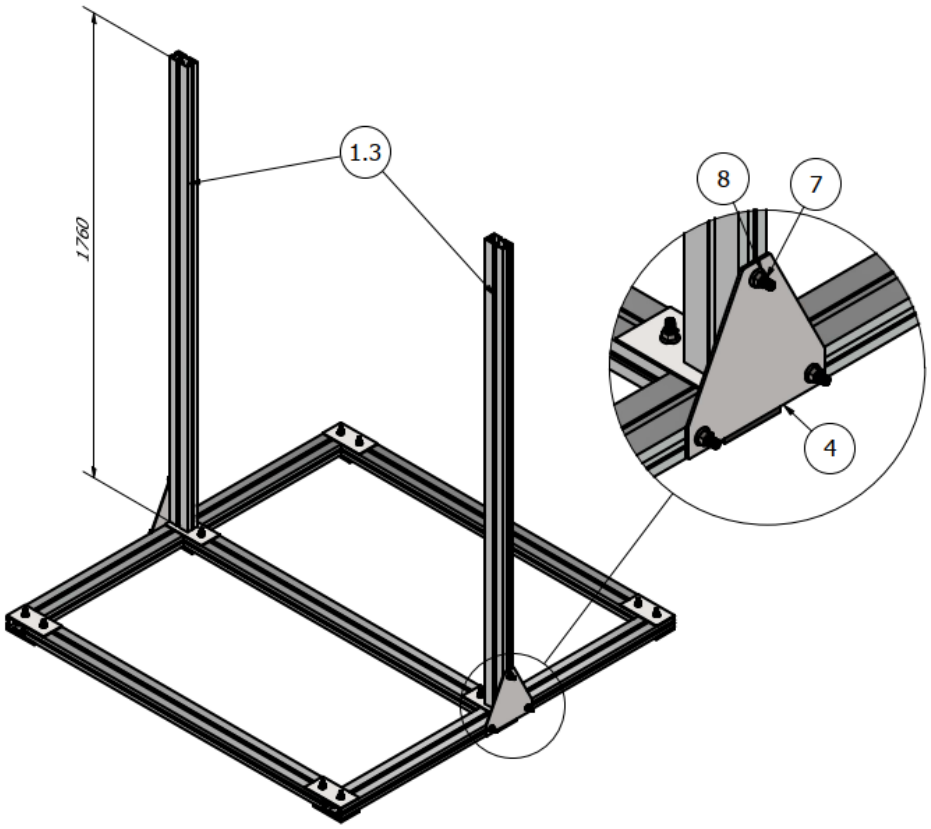


FIG. 4 Installation of vertical columns

5. Using fasteners **2**, screw the horizontal top beam **1.4** as shown in Fig. 5.

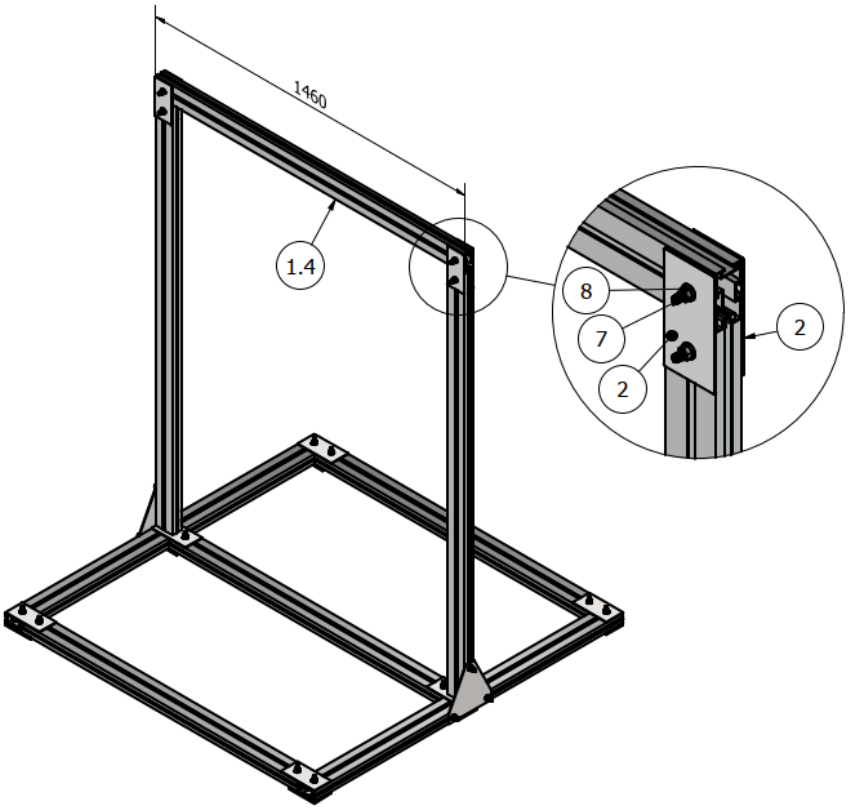


FIG. 5 Mounting the horizontal top beam



KENO
WWW.B2B.KENO-ENERGY.COM
WWW.KENO-ENERGY.COM

6. Screw the struts**1.5** to the base with the plates **3** as shown in Fig. 6. Maintain the strut angle of 45 degrees.

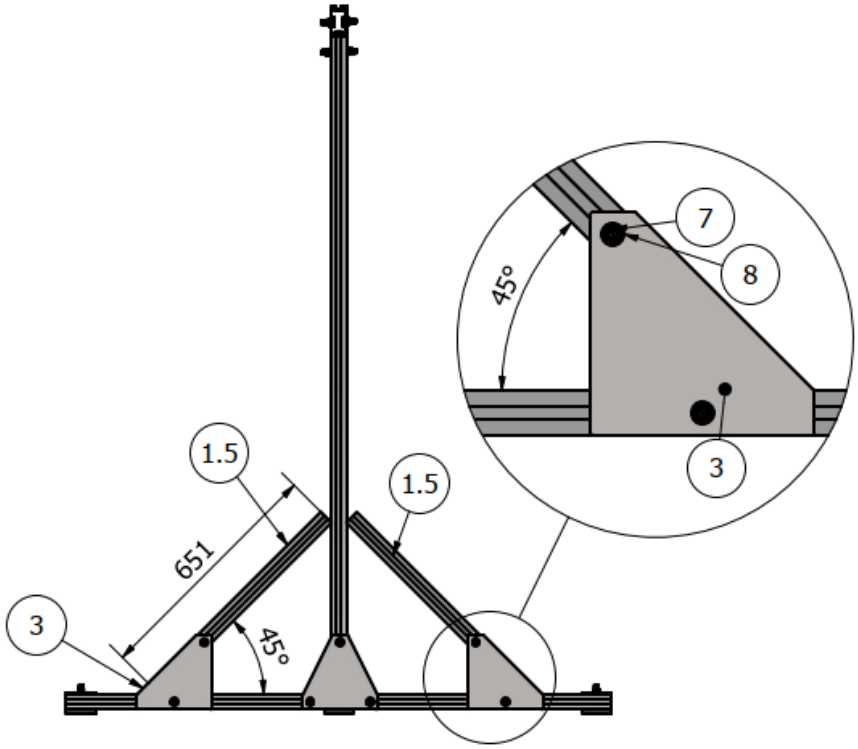


FIG. 6 Assembling the struts to the base

7. Screw the struts **1.5** to the vertical columns with plate **5** as shown in Figure 7.

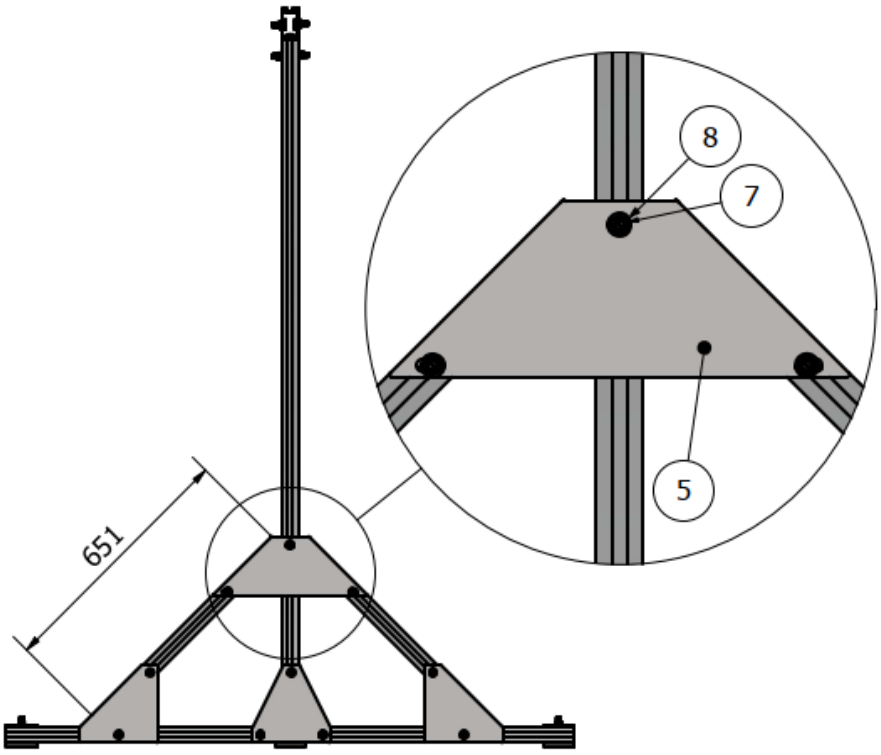


FIG. 7 Bolting the struts to the columns



KENO
WWW.B2B.KENO-ENERGY.COM
WWW.KENO-ENERGY.COM

8. Repeat steps 6 and 7 for the other side of the stand.

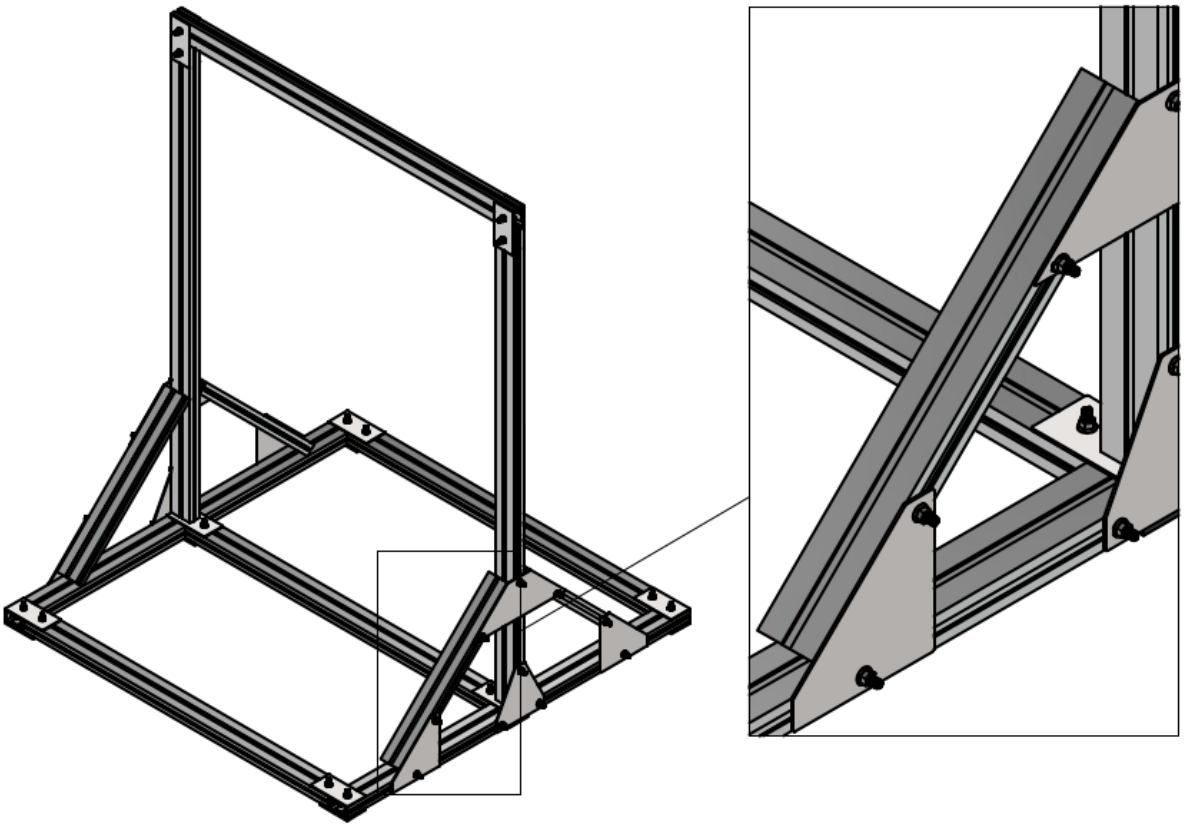

FIG. 8 Structure with screwed-in struts

9. Screw the crossbars **1.2** using the fasteners **2** as shown in Fig.9.

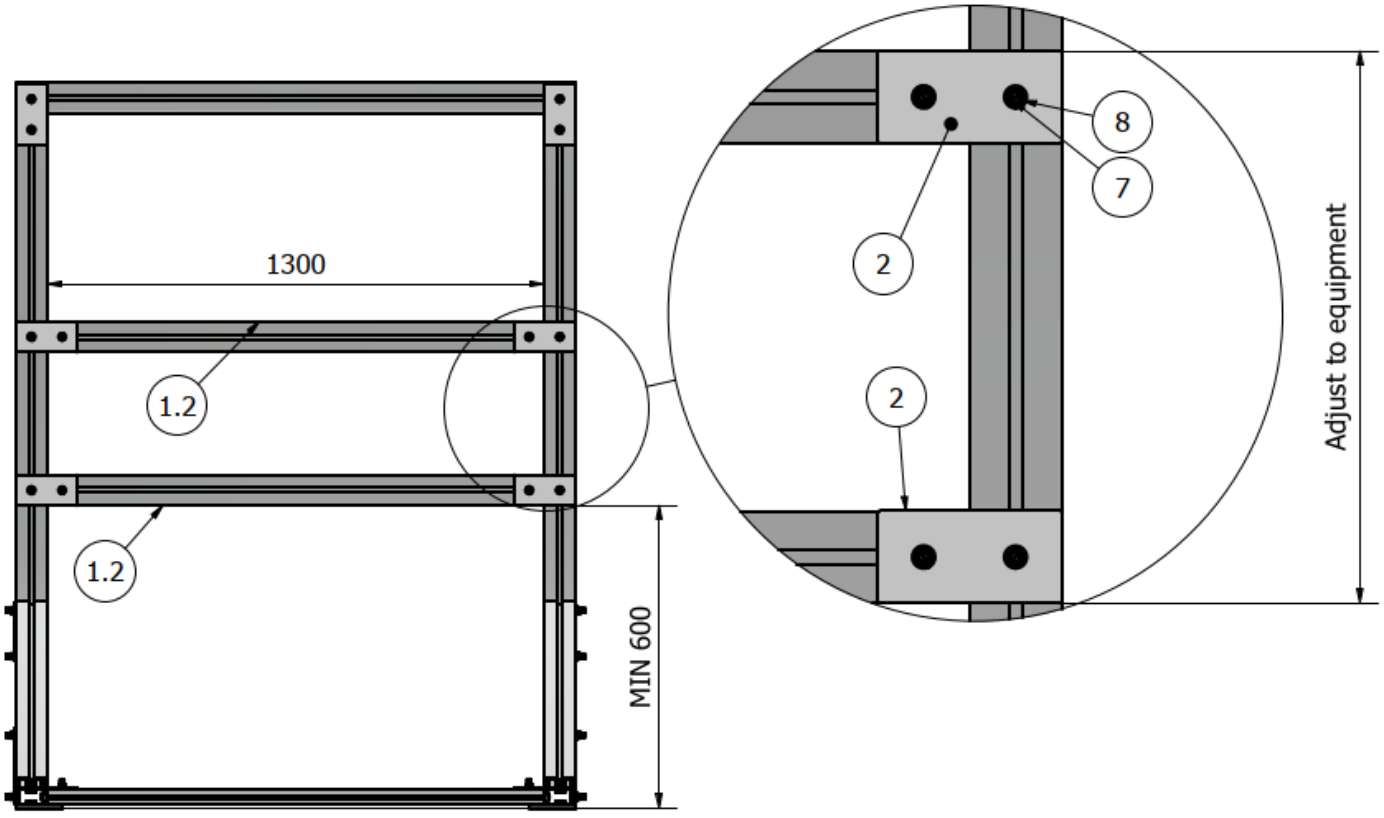


FIG. 9 Assembly of crossbars



KENO
WWW.B2B.KENO-ENERGY.COM
WWW.KENO-ENERGY.COM

*) After purchasing the additional kit **L-06-01**, it should be mounted in the same manner as the crossbar, in accordance with Fig. 10. The **L-06-01** kit includes:

- **1 x K-25-1300**
- **4 x L-06-06**
- **8 x K-19-30**
- **8 x K-21**

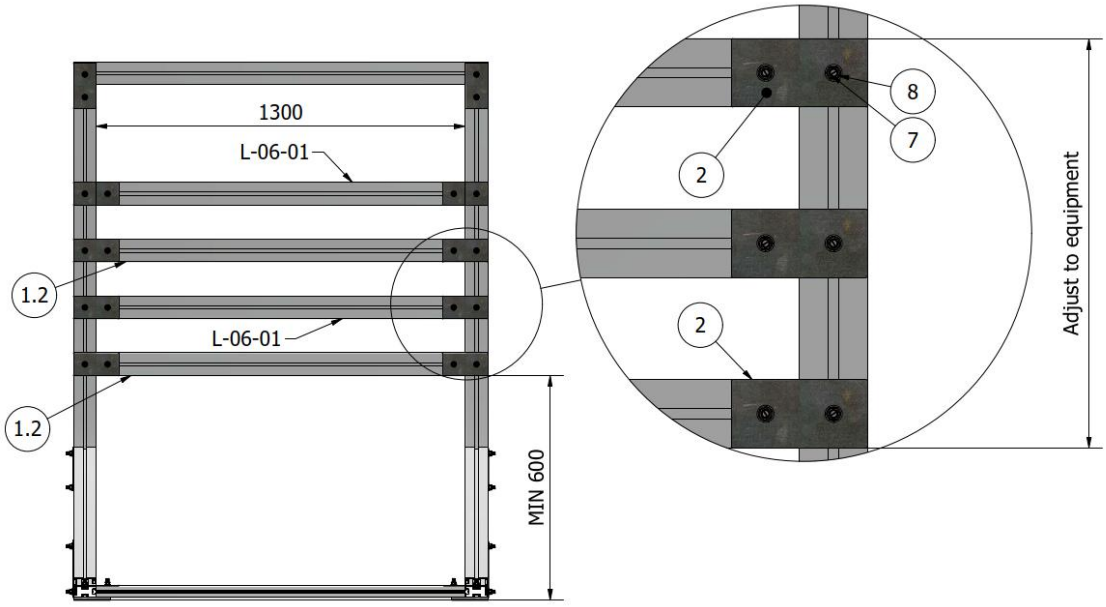


ABB. 10 Montage der Querstangen

10. Tighten all nuts to a torque of 40 Nm.
11. Fit canopy **6** and tighten from the top with a torque of 40Nm.

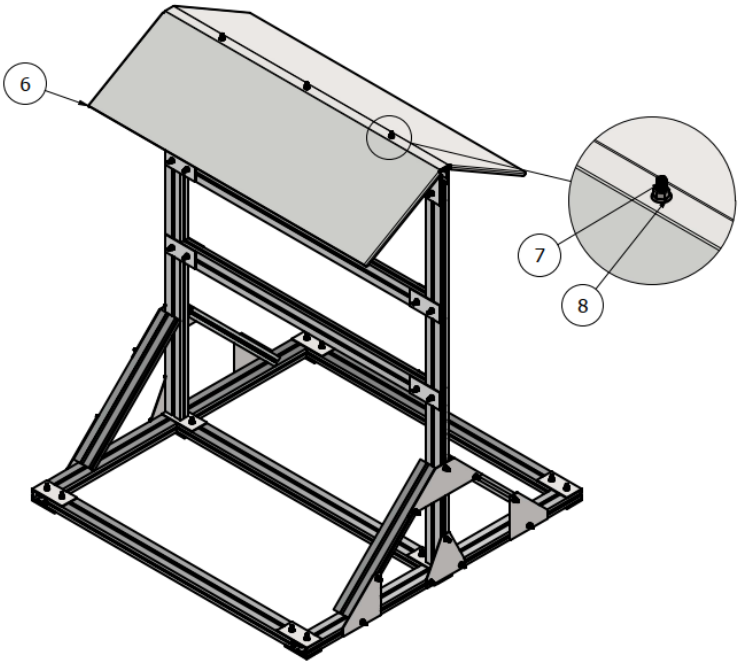




WWW.B2B.KENO-ENERGY.COM
WWW.KENO-ENERGY.COM

FIG. 10 Assembly of the canopy

12. Fit angle brackets under the ballast **1.6** as shown in Fig. 11.

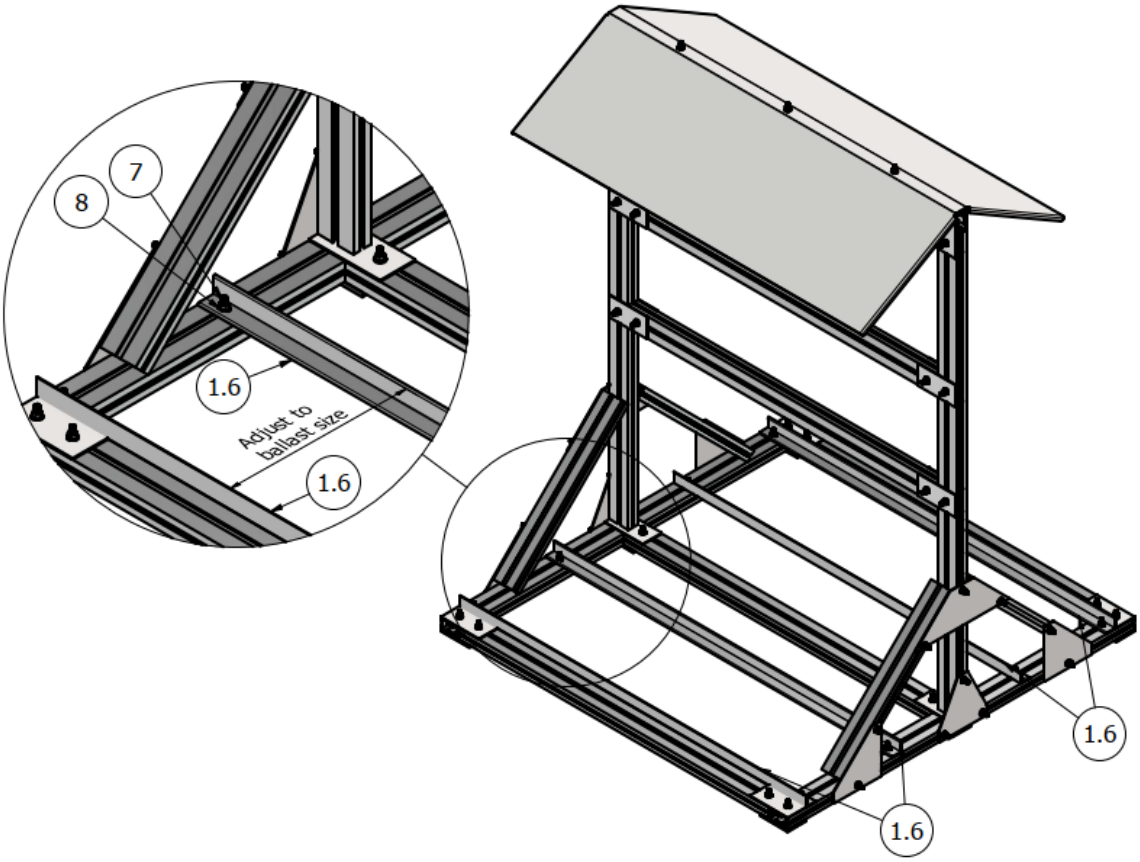


FIG. 11 Installation of the ballast angles



WWW.B2B.KENO-ENERGY.COM
WWW.KENO-ENERGY.COM

**13.** Evenly distribute an appropriately selected ballast (road-grade bentonite is recommended) on the angle brackets, with a mass of at least 100 kg on each side of the structure (at least 200 kg in total), as shown in Fig. 12. **The values given are minimum values; the final mass and distribution of the ballast must be agreed with the structural engineer,** who — after assessing the number and weight of the installed inverters, the type of roof, and the local wind and snow conditions — shall determine the required additional loading of the structure.

**NOTE!**

**The top layer of the roof covering must meet the appropriate strength requirements, i.e. it must be able to bear the weight of the structure together with the installed inverters and the additional ballast load. The entity performing the installation is responsible for verifying the load-bearing capacity of the roof and for adapting the ballast to local conditions. An insufficiently weighted structure must not be left exposed to wind.**

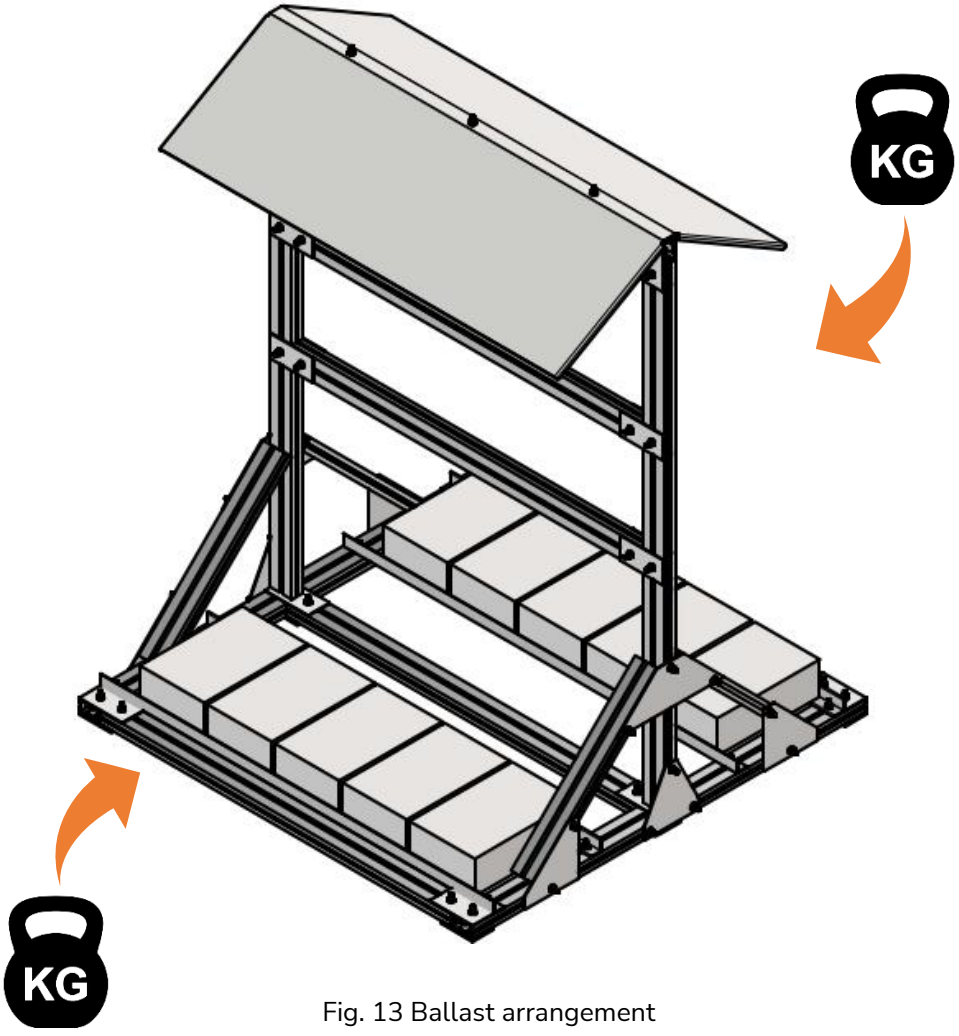


Fig. 13 Ballast arrangement

**Thank you for using the KENO Sp. z o.o. structure.**