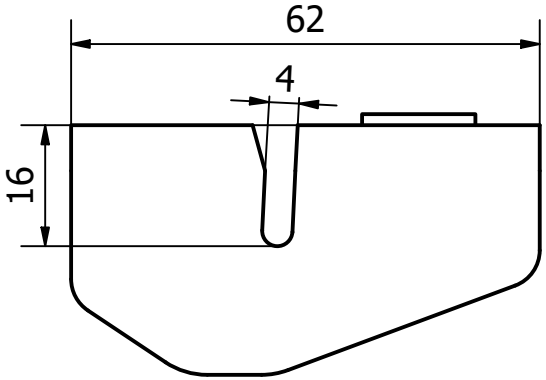


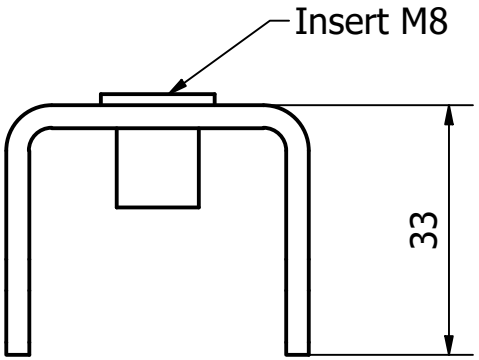


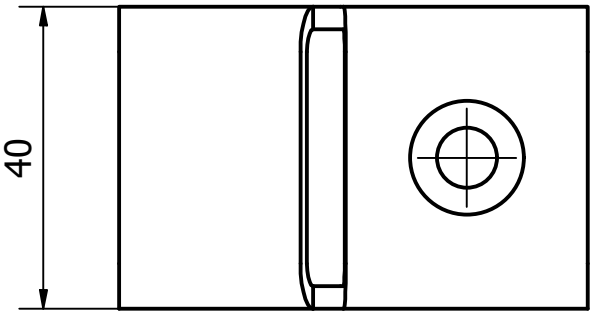


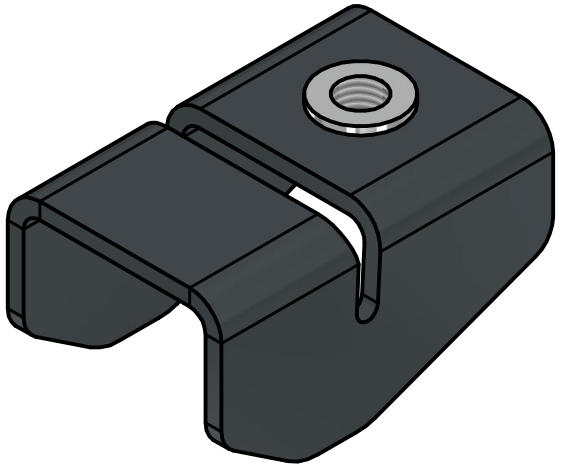

| Designed by | Material | Weight | Date | ISO |
|---|---|---|---|---|
| Tomasz Groeger | | 0,119 kg | 03.11.2025 | (E) |

| | | | |
|---|---|---|---|
| KENO Sp. z o.o.<br>Ul. Daszyńskiego 609, 44-151 Gliwice<br>NIP PL6312671983 | Bracket W-01-12 | Format<br>A4 | Dim without to<br>ISO2768-M<br>ISO13920-B |
| | W-01-12-57-001-D.idw | Scale<br>1 : 1 | Sheet<br>1 / 1 |

© Copyright 2023 Keno sp. z o.o. All rights reserved. All rights, patent or patentable designs or inventions are reserved. The document may not be copied (in whole or in part), used or manufacture or disclosed to others without prior written consent of Keno sp. z o.o.